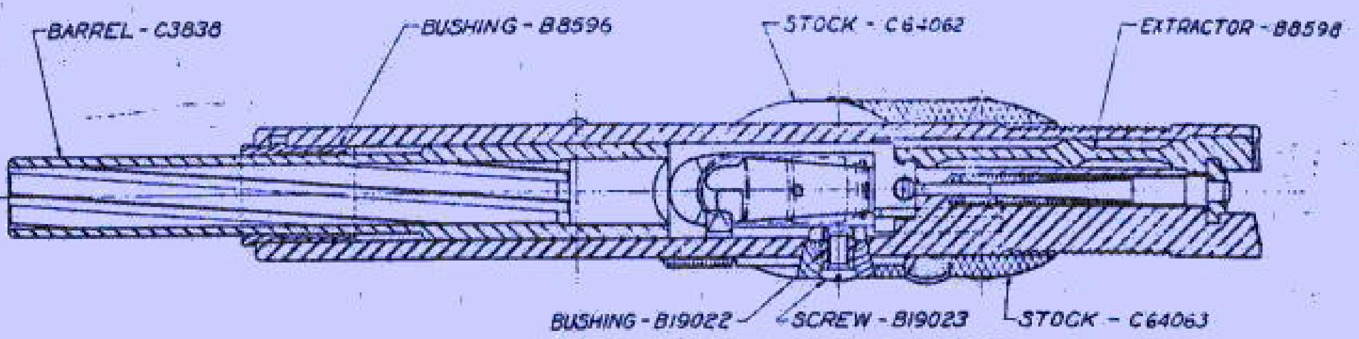
BARREL - C3838
BUSHING - B8596
STOCK - C64062
EXTRACTOR - B8598
BUSHING - B19022
SCREW - B19023
STOCK - C64063

SECTION ON CENTER LINES OF BARREL, FIRING PIN, AND EXTRACTOR

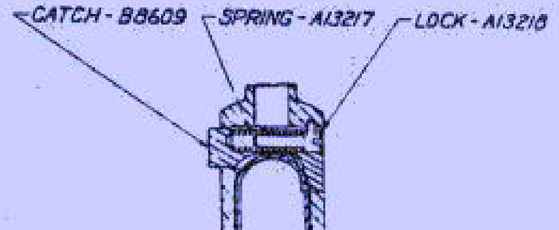
CATCH - B8609
SPRING - A13217
LOCK - A13218

SECTION B-B
MAGAZINE LOCKED BY MAGAZINE CATCH

ILLUST.

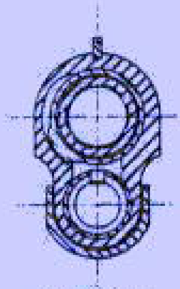

SECTION A-A
REL BUSHING LOCK IN POSITION

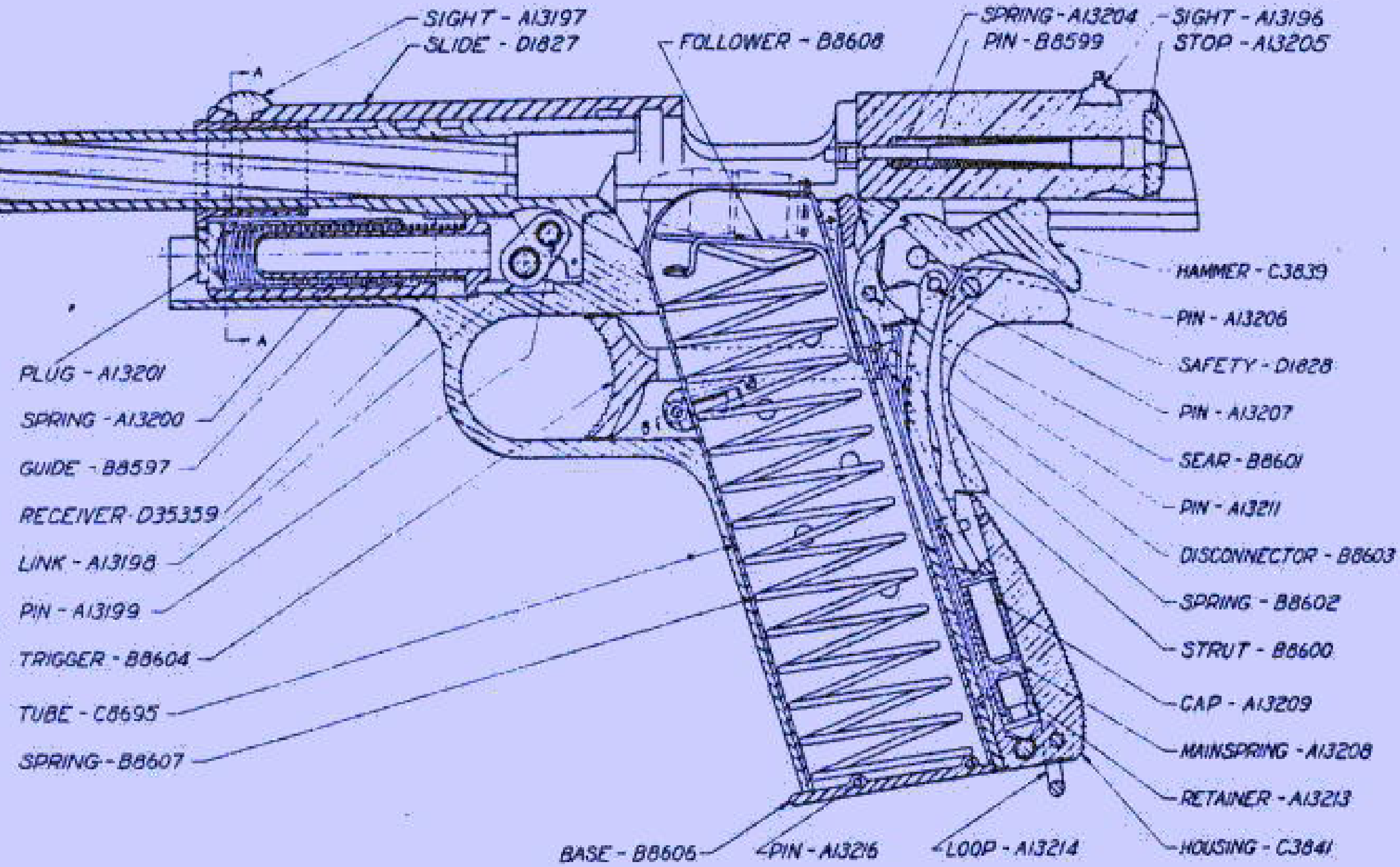
SIGHT - A13197
SLIDE - D1827
FOLLOWER - B8608
SPRING - A13204
PIN - B8599
SIGHT - A13196
STOP - A13205
A
A
HAMMER - C3839
PIN - A13206
SAFETY - D1828
PIN - A13207
SEAR - B8601
PIN - A13211
DISCONNECTOR - B8603
SPRING - B8602
STRUT - B8600
CAP - A13209
MAINSPRING - A13208
RETAINER - A13213
HOUSING - C3841
PLUG - A13201
SPRING - A13200
GUIDE - B8597
RECEIVER - D35359
LINK - A13198
PIN - A13199
TRIGGER - B8604
TUBE - C8695
SPRING - B8607
BASE - B8605
PIN - A13216
LOOP - A13214

0 1 2 3 4 5 INCHES

PART OLD TRACING E269 UNDER REVISION DATE OF JAN 15,1936

PISTOL, AUTOMATIC
CAL .45 M1911A1
SECTIONAL VIEWS

JAN.15,1936
REVISIONS

CLASS	DIVISION	DRAWING	FILE
42	8	32	

SYMBOL
VYP2

DRG PERTAINS TO
42-8 .45AP-M1911A1

DFTSMAN
TRACER
LOC DFTSMAN
CHECKED
CHIEF DFTSMAN

SUBMITTED
CAPT ORD DEPT U.S.A.

EXAMINED
W. Wood
LT COL ORD DEPT U.S.A.

APPROVED BY ORDER OF THE
CHIEF OF ORDNANCE
LT COL ORD DEPT U.S.A.

ORDNANCE DEPT U.S.A.

SHEET 1 OF 2 SHEETS

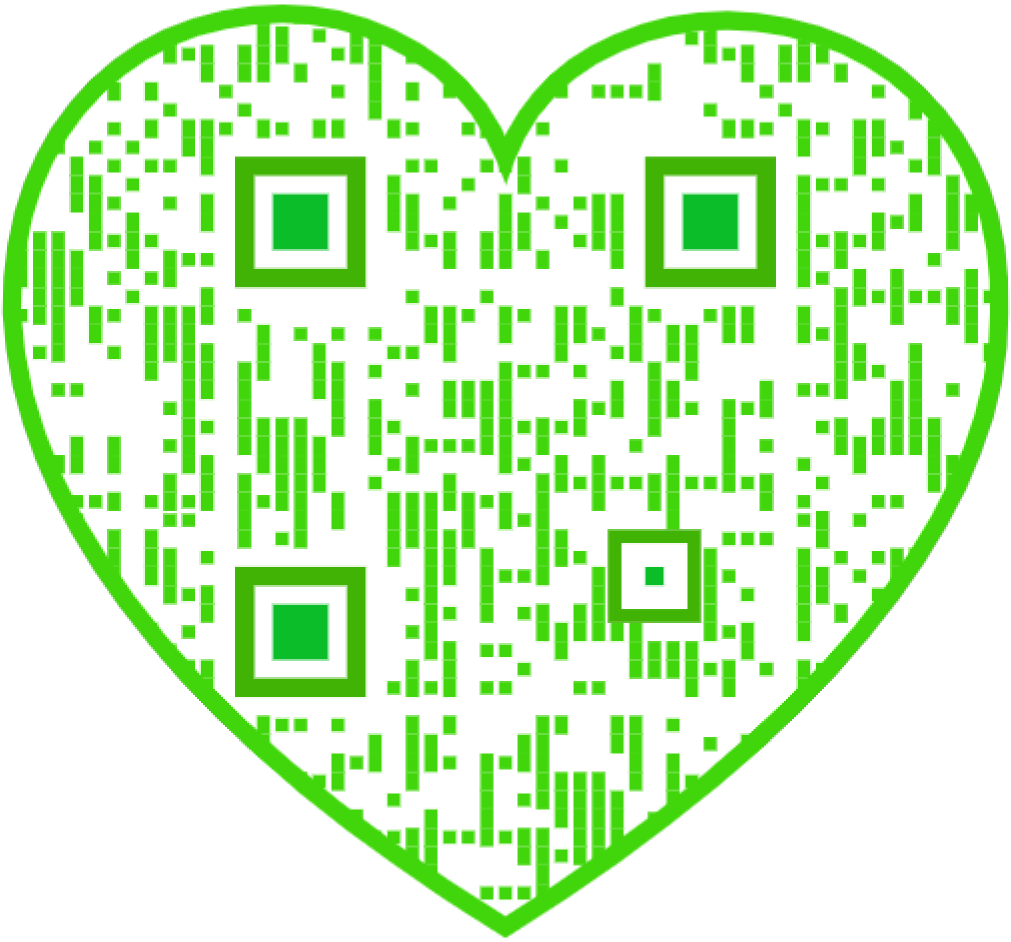

[illegible] TREATMENT AND FINISH

PHYSICAL PROPERTIES		REVISIONS	
Y.P.		1	1-15-36
[illegible]		2	1-27-38
E.L.			
RED			
AR			
[illegible]			
SCL			

DRG. PERTAINS TO	
[illegible]	45 [illegible] A1
[illegible]	RECEIVER ASS'MB'Y
[illegible]	RECEIVER

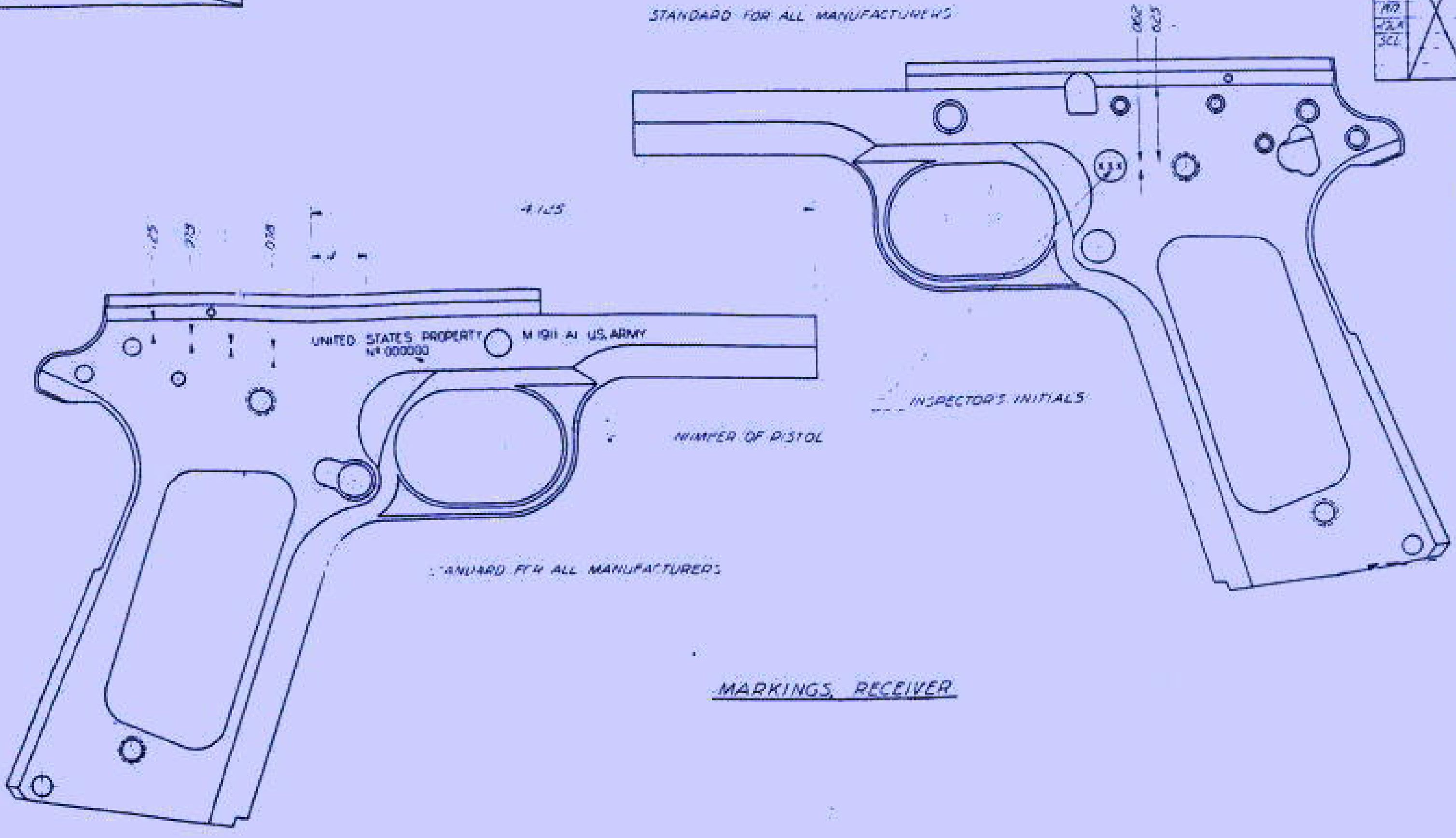
STANDARD FOR ALL MANUFACTURERS
.062
.025
4.125
.125
.219
.078
UNITED STATES PROPERTY
Nº 000000
M 1911 A1 U.S. ARMY
INSPECTOR'S INITIALS
NUMBER OF PISTOL
STANDARD FOR ALL MANUFACTURERS

MARKINGS, RECEIVER

TOLERANCE ±.01 ALLOWED ON ALL DIMENSIONS UNLESS OTHERWISE SPECIFIED

SUPERSEDES OLD TRACING C3843 UNDER REVISION DATE OF JAN 15, 1936

SCALE 2/1

C3843

SYMBOL
MAM-6
DRAFTSMAN E.L.J.
TRACED BY [illegible]
CHECKED [illegible]
CAPT. ORD. DEPT. U.S.A.
APPROVED BY ORDER OF THE CHIEF OF ORDNANCE
ORD. DEPT. U.S.A.
ORDNANCE DEPT. U.S.A.

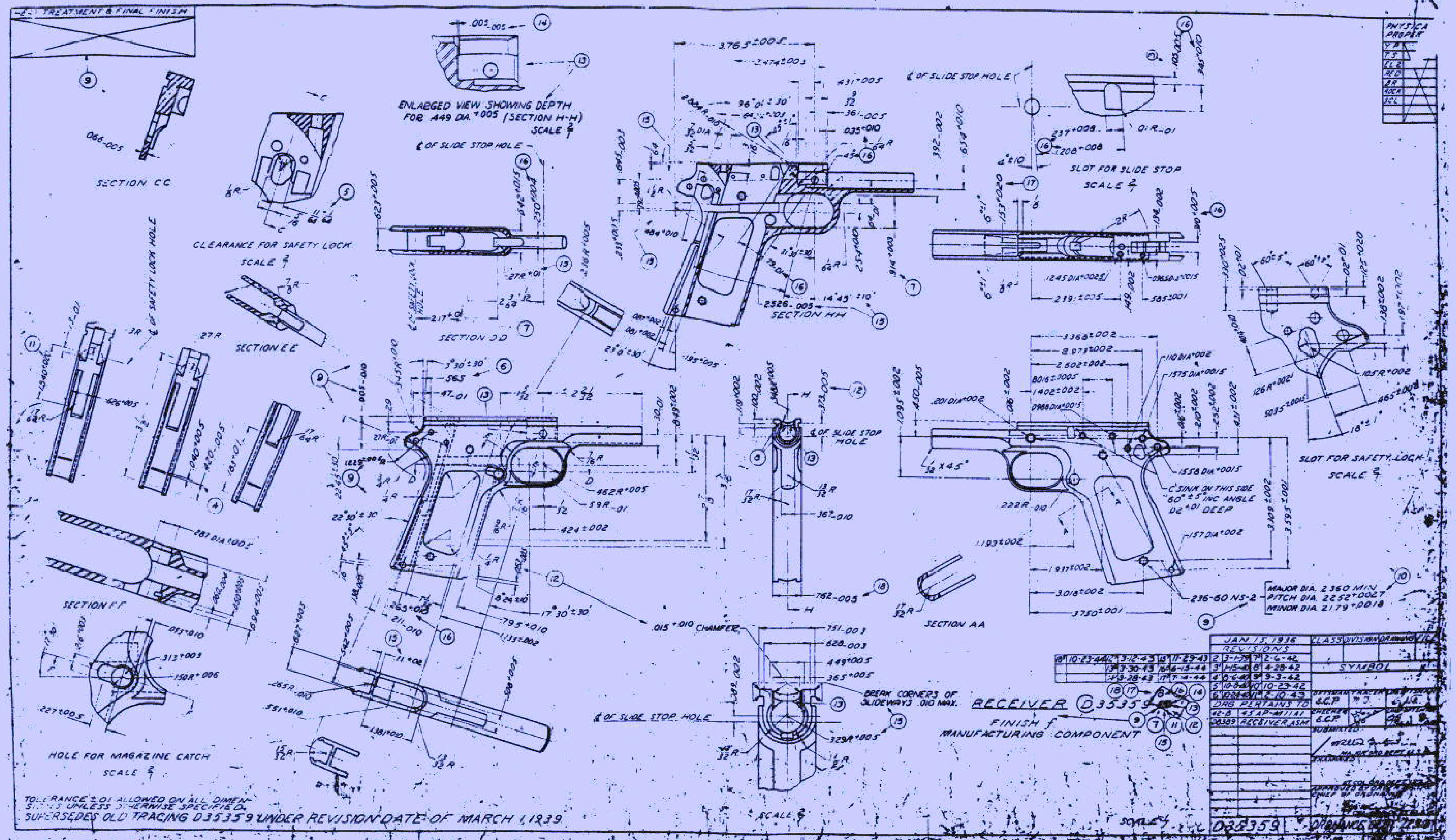
HEAT TREATMENT & FINAL FINISH
SECTION CC
CLEARANCE FOR SAFETY LOCK
SCALE 2/1
ENLARGED VIEW SHOWING DEPTH FOR .449 DIA. +.005 (SECTION H-H)
SCALE 2/1
℄ OF SLIDE STOP HOLE
SECTION DD
SECTION EE
SECTION HH
SLOT FOR SLIDE STOP
SCALE 2/1
SECTION FF
HOLE FOR MAGAZINE CATCH
SCALE 2/1
SLOT FOR SAFETY LOCK
SCALE 2/1
SECTION AA
C'SINK ON THIS SIDE 60° ±5° INC ANGLE .02 +.01 DEEP
.236-60 NS-2
MAJOR DIA. .2360 MIN
PITCH DIA. .2252 +.0027
MINOR DIA. .2179 +.0018
.015 +.010 CHAMFER
BREAK CORNERS OF SLIDEWAYS .010 MAX.
RECEIVER D35359
FINISH f
MANUFACTURING COMPONENT
TOLERANCE ±.01 ALLOWED ON ALL DIMENSIONS UNLESS OTHERWISE SPECIFIED.
SUPERSEDES OLD TRACING D35359 UNDER REVISION DATE OF MARCH 1, 1939
SCALE 4
JAN 15, 1936
REVISIONS
2 3-1-39
3 11-15-40
4 6-6-40
5 10-8-40
6 10-28-40
7 2-6-42
8 4-28-42
9 9-3-42
10 10-23-42
11 2-10-43
12 3-12-43
13 3-30-43
14 9-28-43
15 11-29-43
16 6-15-44
17 7-14-44
18 10-23-44
CLASS
DIVISION
DRAWING
SYMBOL
DRG PERTAINS TO
42-B 45 AP-M1911A1
D8389 RECEIVER ASM
E.C.P.
M.J.
CHECKED
E.C.P.
SUBMITTED
APPROVED
CHIEF OF ORDNANCE
D35359
ORDNANCE DEPT

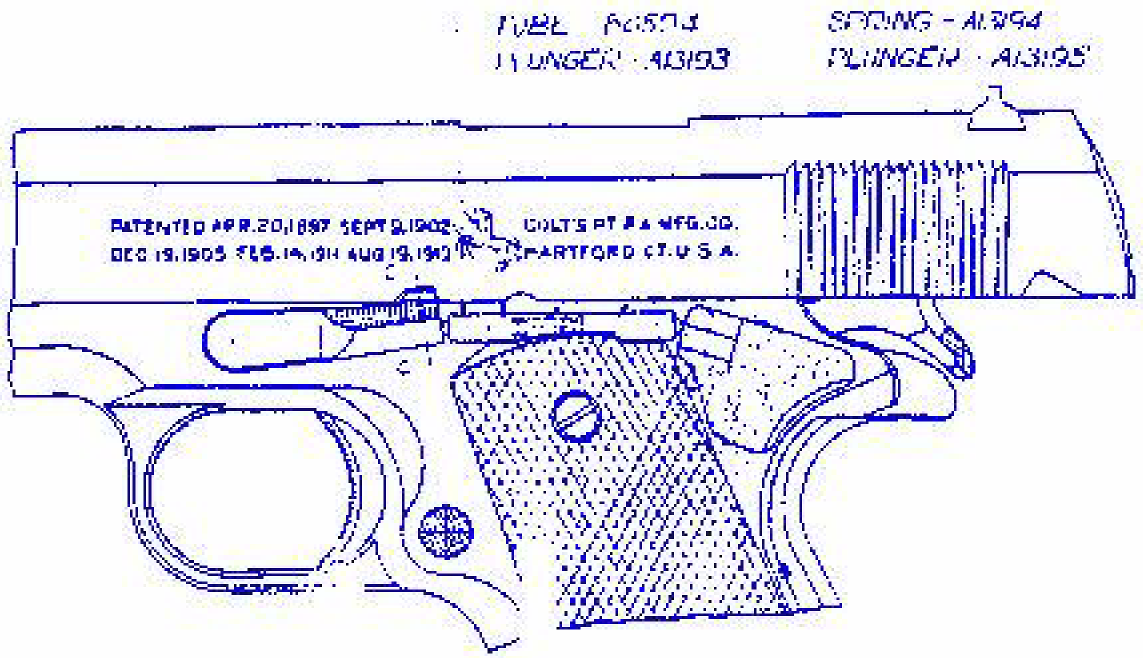
TUBE - A6504
PLUNGER - A13193
SPRING - A13194
PLUNGER - A13195
PATENTED APR.20,1897 SEPT.9,1902
DEC.19,1905 FEB.14,1911 AUG.19,1913
COLT'S PT F.A. MFG.CO.
HARTFORD CT. U.S.A.

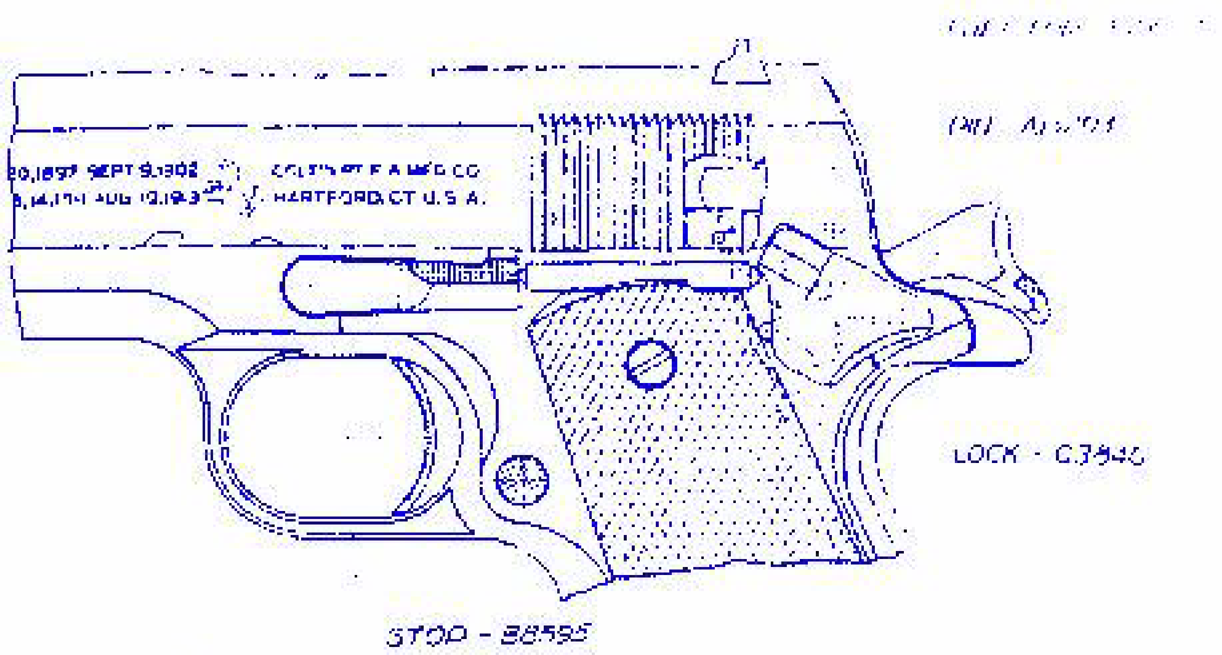
20,1897 SEPT.9,1902
14,1911 AUG.19,1913
COLT'S PT F.A. MFG.CO.
HARTFORD CT. U.S.A.
PIN - A1.. 04
LOCK - C3846
STOP - B8595

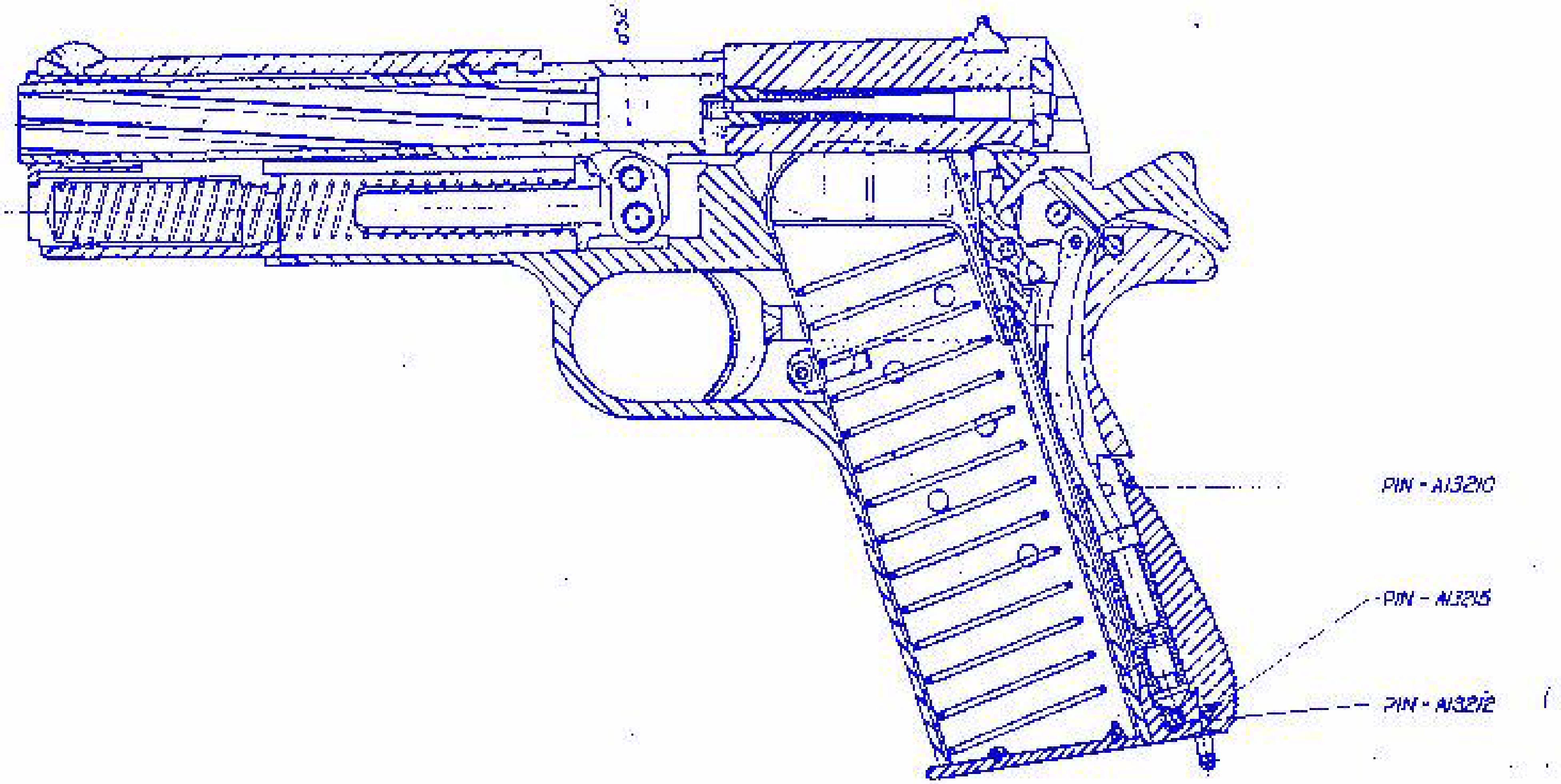
PIN - A13210
PIN - A13215
PIN - A13212

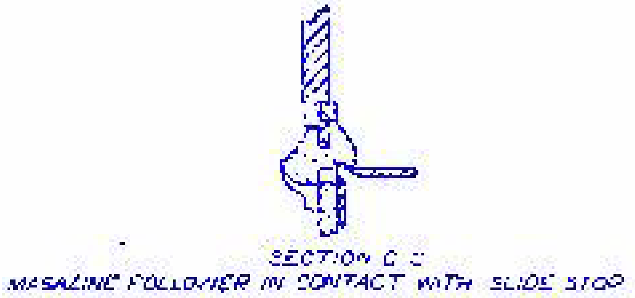
SECTION C-C
MAGAZINE FOLLOWER IN CONTACT WITH SLIDE STOP

SUPERSEDES IN PART OLD TRACING E369 UNDER REVISION DATE OF JAN 15, 1936

0 1 2 3 4 5 INCHES

PISTOL, AUTOMATIC
CAL. 45 M1911A1
SECTIONAL AND EXTERIOR VIEWS

JAN 15, 1936	CLASS	DIVISION	DRAWING FILE
REVISIONS	42	8	32A
1 8-5-39	SYMBOL		
2 4-13-42	VYP2		
3 10-6-42			
4 3-2-43			

DRG. PERTAINS TO
42 B - 45AF M1911A1

DFTSMAN
TRACER
COL. DFTSMAN
CHECKED
SUBMITTED
CAPT. ORD. DEPT. U.S.A.
EXAMINED BY
LT. COL. ORD. DEPT. U.S.A.
APPROVED BY ORDER OF
CHIEF OF ORDNANCE
COL. ORD. DEPT. U.S.A.
ORDNANCE DEPT. U.S.A.

HEAT TREATMENT & FINAL FINISH

PHYSICAL PROPERTIES	
Y. P.	
T. S.	
EL. 2	
RED.	
BR.	
ROCK	

MAY 1, 1926

14	8-10-42
15	3
16	4-26-43
17	6-8-43
18	7-23-43
19	11-23-43
20	2-30-43
21	6-15-44

ERTAINS TO

42-8 45 AP M11-A1

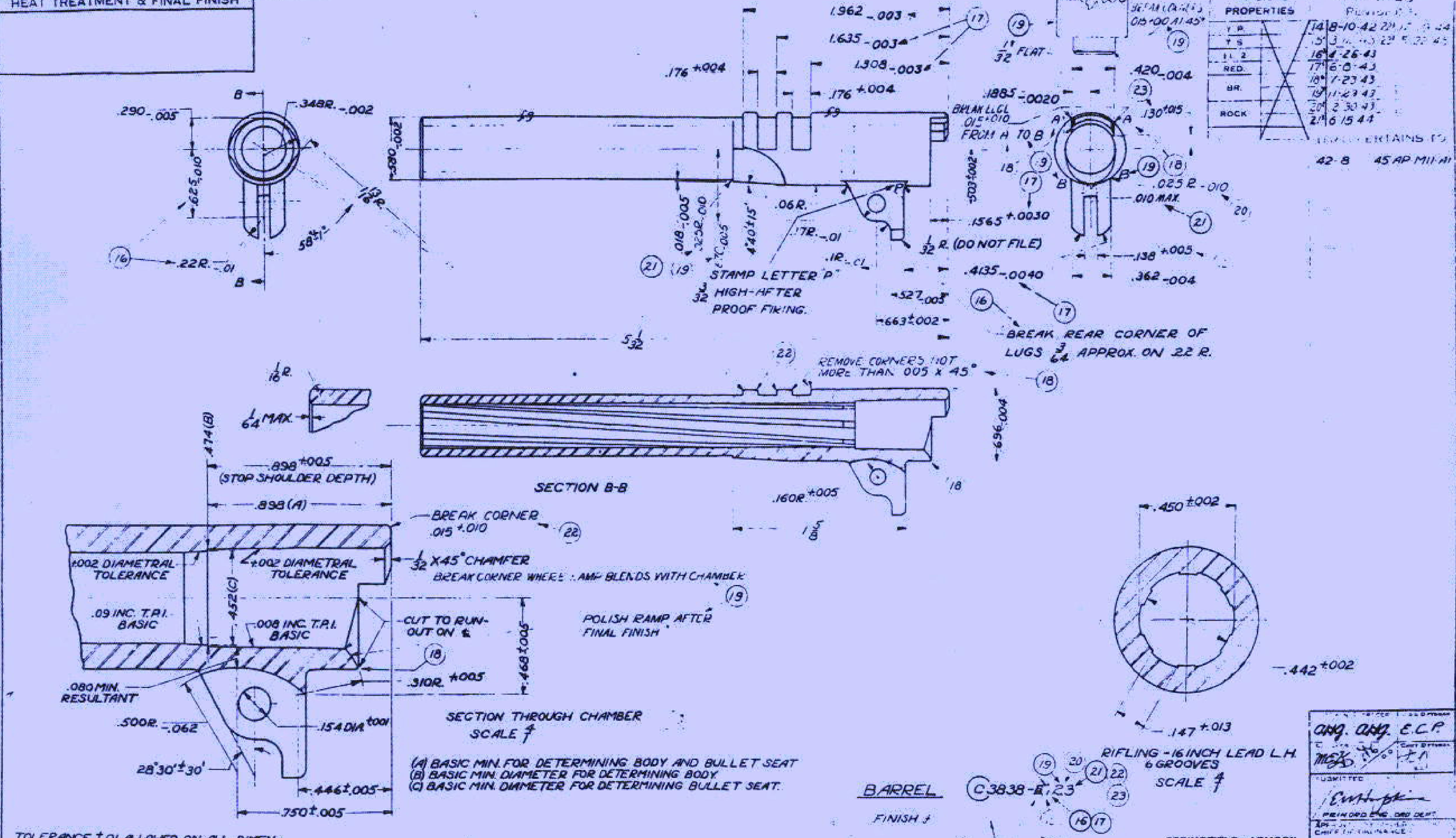
B
.290 -.005
.348R. -.002
.625 -.010
13/16 R.
58° ±1°
(16)
.22R. -.01
B
.176 +.004
1.962 -.003
1.635 -.003
1.308 -.003
(17)
.176 +.004
.380 -.002
.018 -.005
.352 -.010
.170 -.005
4°40' ±15'
.06R.
.17R. -.01
.1R. -CL
P
1/32 R. (DO NOT FILE)
(21)
(19)
STAMP LETTER "P" 3/32 HIGH-AFTER PROOF FIRING.
.527 -.005
.663 ±.002
5 1/32
(19)
1/32 FLAT
.015 -.001 X 45°
(19)
.420 -.004
.1885 -.0020
(23)
.130 +.015
BREAK EDGE .015 +.010 FROM A TO B
A
A
18
.9
.503 ±.002
(17)
B
(19)
(18)
B
.025 R. -.010
.010 MAX.
20
(21)
.1565 +.0030
.138 +.005
.4135 -.0040
.362 -.004
(16)
(17)
BREAK REAR CORNER OF LUGS 3/64 APPROX. ON .22 R.
1/16 R.
1/64 MAX.
(22)
REMOVE CORNERS NOT MORE THAN .005 x 45°
(18)
.696 -.004
SECTION B-B
.160R. +.005
1 5/64
18
.474 (B)
.898 +.005 (STOP SHOULDER DEPTH)
.898 (A)
BREAK CORNER .015 +.010
(22)
±.002 DIAMETRAL TOLERANCE
.09 INC. T.P.I. BASIC
±.002 DIAMETRAL TOLERANCE
.008 INC. T.P.I. BASIC
.452 (C)
1/32 X 45° CHAMFER
BREAK CORNER WHERE RAMP BLENDS WITH CHAMBER
(19)
CUT TO RUN-OUT ON ℄
POLISH RAMP AFTER FINAL FINISH
.468 ±.005
(18)
.310R. +.005
.080 MIN. RESULTANT
.500R. -.062
.154 DIA +.001
28°30' ±30'
.446 ±.005
.750 ±.005
SECTION THROUGH CHAMBER
SCALE 4/1
.450 ±.002
.442 +.002
.147 +.013
RIFLING - 16 INCH LEAD L.H. 6 GROOVES
SCALE 4/1

(A) BASIC MIN. FOR DETERMINING BODY AND BULLET SEAT
(B) BASIC MIN. DIAMETER FOR DETERMINING BODY
(C) BASIC MIN. DIAMETER FOR DETERMINING BULLET SEAT

BARREL

FINISH

C3838-B, 23

(19) (20) (21) (22) (23) (16) (17) (18) (17)

SCALE 2/1

TOLERANCE ±.01 ALLOWED ON ALL DIMENSIONS UNLESS OTHERWISE SPECIFIED

SUPERSEDES OLD TRACING C3838 UNDER REVISION DATE OF AUGUST 10, 1942

SPRINGFIELD ARMORY

C-3838

A.W.G. A.W.G. E.C.P.

M.G.J.D.

SUBMITTED

PRIN. ORD. ENG. ORD. DEPT.

CHIEF OF ORDNANCE

COL. ORD. DEPT.

ORDNANCE DEPT. U.S.A.

HEAT TREATMENT & FINAL FINISH

PHYSICAL PROPERTIES		JAN. 15, 1936 REVISIONS			
Y. P.		10	9-5-42		
T. S.		11	9-6-44		
EL. %					
RED.					
BR.					
ROCK.					

D'R'G PERTAINS TO	
42-B	45 A P M11 A1

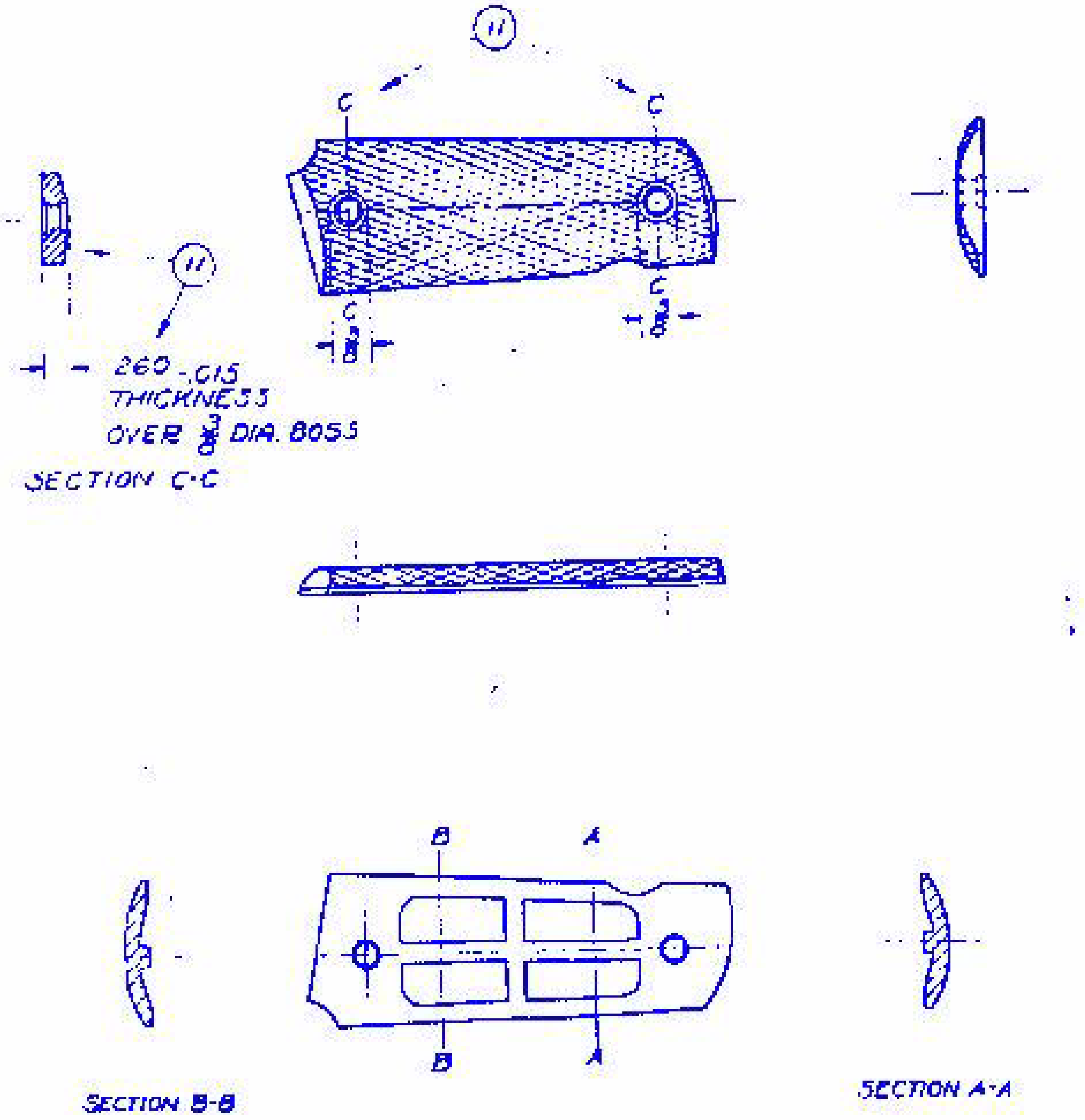
(11)
C
C
C
C
3/8
3/8
(11)
.260-.015 THICKNESS OVER 3/8 DIA. BOSS
SECTION C-C
B
A
B
A
SECTION B-B
SECTION A-A

NOTES: — FOR DIMENSIONS SEE DRG. OF WOOD STOCK.
INSIDE RECESSES MAY VARY SUBJECT TO APPROVAL OF CONTRACTING OFFICER.

STOCK, RIGHT HAND, PLASTIC (C)64062-11

(11)

TOLERANCE ±.01 ALLOWED ON ALL DIMENSIONS UNLESS OTHERWISE SPECIFIED

SUPERSEDES OLD TRACING C64062 UNDER REVISION DATE OF SEPT. 5, 1942

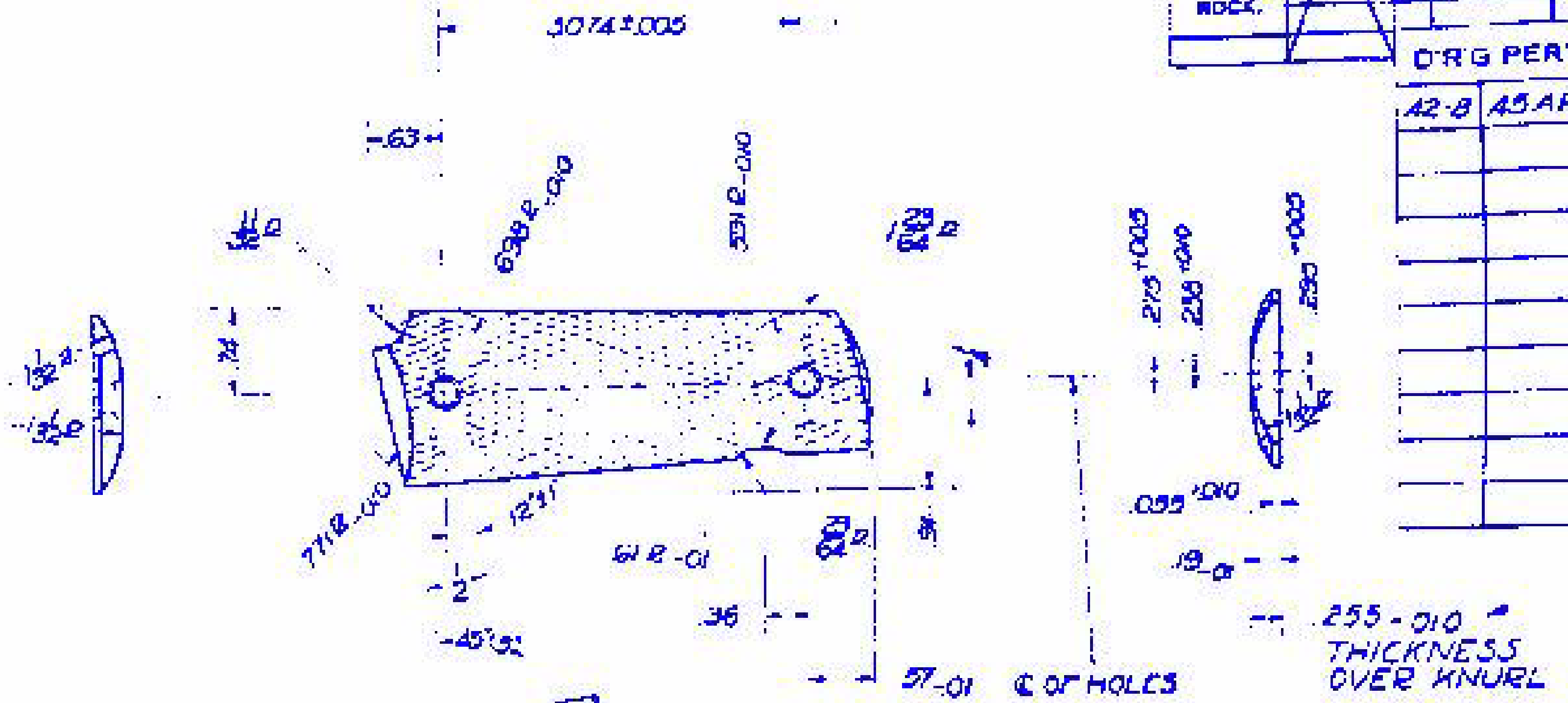
3.074±.005
.63
11/32 R
.638 R -.010
.531 R -.010
1 23/64 R
1 1/32 R
1/32 R
.771 R -.010
12°11'
2
45°31'
.61 R -.01
.36
23/64 R
.57-.01
℄ OF HOLES
.275 +.005
.250 +.010
.250 +.005
1/32 R
.055 +.010
.19 -.01
.255-.010 THICKNESS OVER KNURL
(11)

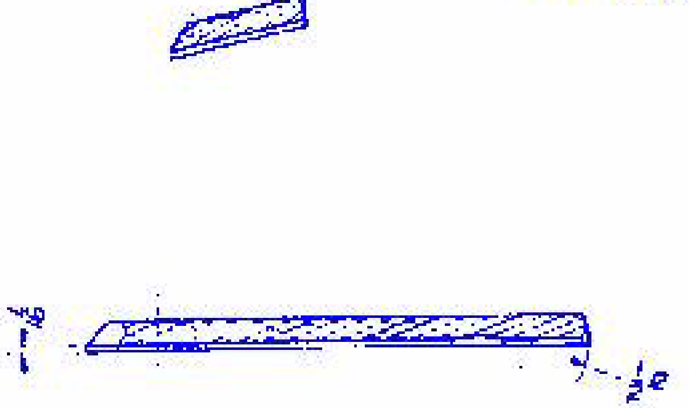

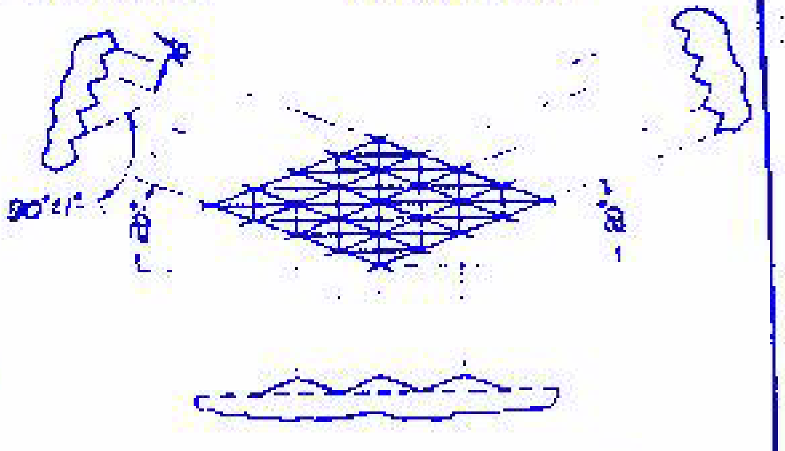

ENLARGED VIEW OF DIAMOND CHECK
SCALE 4/1

STOCK, RIGHT HAND, WOOD (C)64062-11

(11)

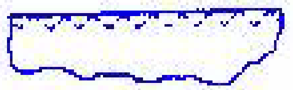

OPTIONAL
CHECKING MAY BE HOT PRESSED
SCALE 4/1

SPRINGFIELD ARMORY

SCALE 1/1

C-64062

DRAFTSMAN	TRACER	
J.M.	J.T.D.	E.C.P.
CHECKER		
9708		

SUBMITTED:

ORD. DEPT

APPROVED BY ORDER OF THE CHIEF OF ORDNANCE:-

COL. ORD. DEPT.

ORDNANCE DEPT. U. S. A.

HEAT TREATMENT & FINAL FINISH

PHYSICAL PROPERTIES		MAY 1 1920			
		REVISIONS			
Y.P.		14	3-9-44		
T.S.		15ᴬ	6-15-44		
EL. 2		16ᴬ	7-14-44		
RED					
RA.					
ROCK					

DRG. PERTAINS TO	
42-8	45AP M1911

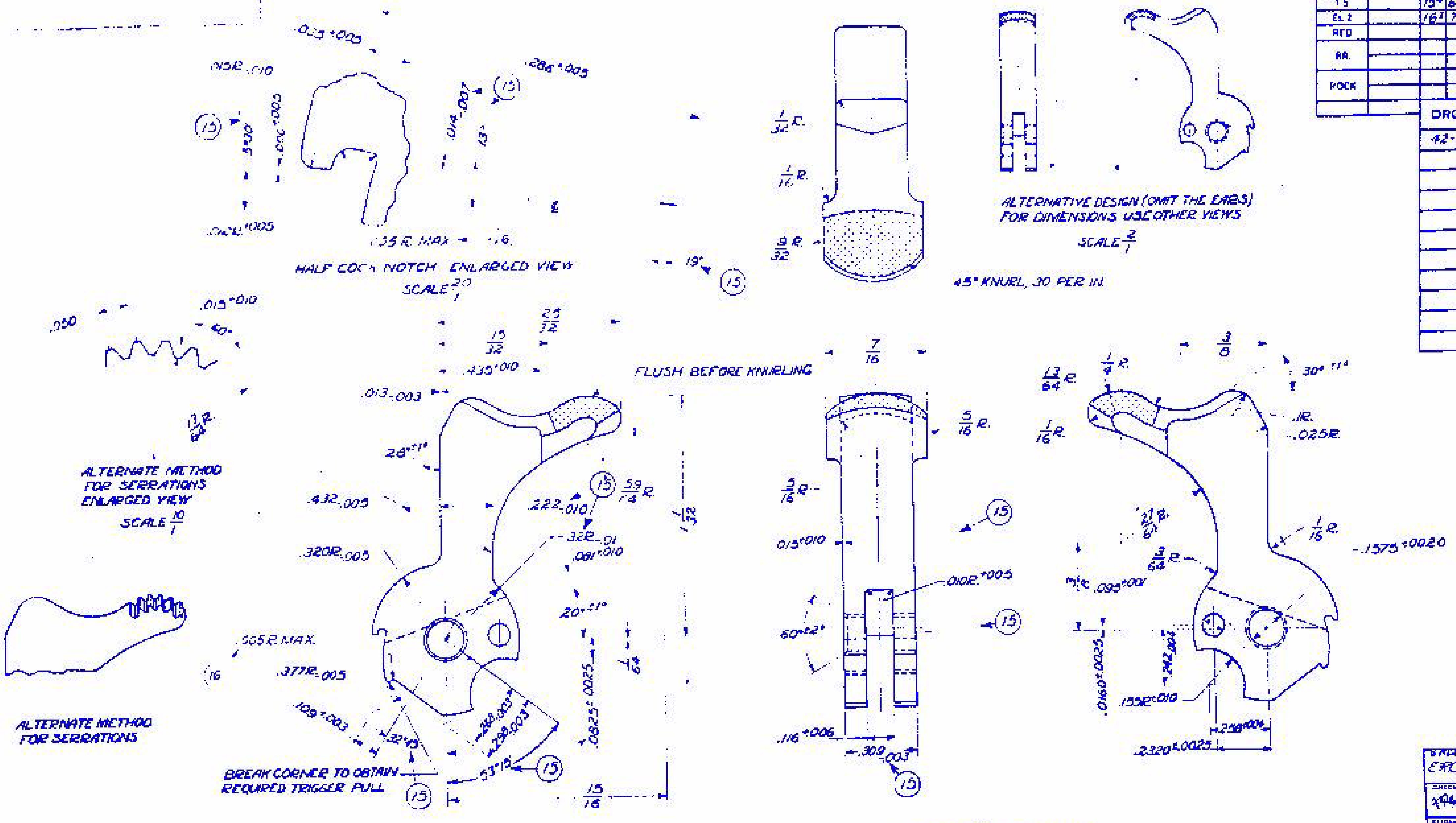

.033 ±.005
.052 ±.010
.286 ±.003
15
.014 -.007
13°
.530
.070 ±.003
.062 ±.005
.035 R. MAX.
.16
HALF COCK NOTCH ENLARGED VIEW
SCALE 20/1
19°
15
1/32 R.
1/16 R.
19/32 R.
ALTERNATIVE DESIGN (OMIT THE EARS)
FOR DIMENSIONS USE OTHER VIEWS
SCALE 2/1
45° KNURL, 30 PER IN.
.050
.015 ±.010
60°
13/64 R.
ALTERNATE METHOD FOR SERRATIONS ENLARGED VIEW
SCALE 10/1
ALTERNATE METHOD FOR SERRATIONS
25/32
15/32
.435 ±.010
.013 -.003
26° ±1°
.432 ±.005
.320 R. ±.005
.222 ±.010
59/64 R.
.32 R. ±.01
.081 ±.010
1 1/32
20° ±1°
.0825 ± .0025
1/64
.505 R. MAX.
.16
.377 R. ±.005
.109 ±.003
32° ±3°
.268 ±.003
.298 ±.003
53° ±3°
BREAK CORNER TO OBTAIN REQUIRED TRIGGER PULL
15/16
FLUSH BEFORE KNURLING
7/16
5/16 R.
5/16 R.
.015 ±.010
.010 R. ±.005
60° ±2°
.116 ±.006
.309 -.003
3/8
1/4 R.
13/64 R.
30° ±1°
1/16 R.
.1 R.
.025 R.
21/64 R.
3/64 R.
1/16 R.
.1575 ±.0020
.095 ±.001
.0160 ±.0025
.242 ±.004
.155 R. ±.010
.258 ±.004
.2320 ±.0025

HAMMER Ⓒ3839-16

FINISH f

⑮ ⑯

SCALE 4/1

C3839

DRAWN	TRACED	
E.R.C.	E.R.C.	E.C.P.
CHECKED		
X.P.M.	MCA	

SUBMITTED.

ENGINEERING DEPT

APPROVED BY ORDER OF THE CHIEF OF ORDNANCE.

ORD. DEPT

ORDNANCE DEPT U.S.A.

TOLERANCE ±.01 ALLOWED ON ALL DIMENSIONS UNLESS OTHERWISE SPECIFIED

SUPERSEDES OLD TRACING C3839 UNDER REVISION DATE OF MARCH 8, 1944

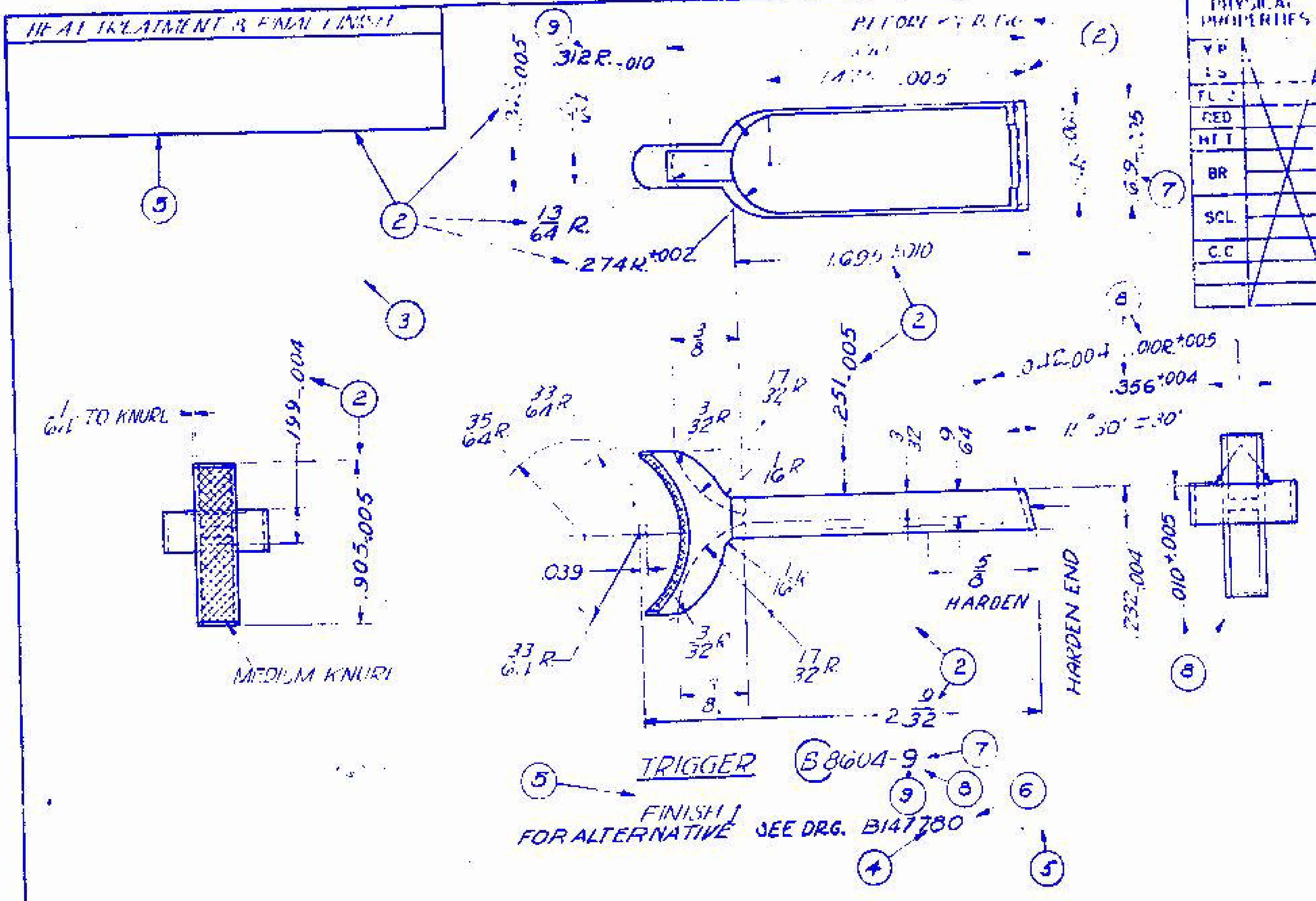
HEAT TREATMENT & FINAL FINISH
312R.-.010
13/64 R.
.274R.+.002
1.695-.010
.005
1/64 TO KNURL
.199-.004
.905-.005
MEDIUM KNURL
35/64 R
33/64 R
3/32 R
17/32 R
1/16 R
.251-.005
3/32
9/64
.042-.004
.010R+.005
.356+.004
11°30' ± 30'
.039
33/64 R
3/32 R
17/32 R
1/16 R
5/8
HARDEN
HARDEN END
.232-.004
.010-.005
3/8
2 9/32
TRIGGER
B8604-9
FINISH

FOR ALTERNATIVE SEE DRG. B147780

TOLERANCE ±.01 ALLOWED ON ALL DIMENSIONS UNLESS OTHERWISE SPECIFIED.

SUPERSEDES OLD TRACING B8604 UNDER REVISION DATE OF JAN. 15, 1936.

SCALE 2/1

B 8604

PHYSICAL PROPERTIES	
Y.P.	
T.S.	
EL.	
RED	
H.T.	
BR	
SCL.	
C.C	

REVISIONS	
1	[illegible]
2	[illegible]
3	[illegible] 10
4¹	6-29-42
5³	9-16-42
6¹	1-1-43
7²	7-23-43
8³	9-28-43
9²	11-29-43

DRG PERTAINS TO

SYMBOL

CBT369

D'FTSMAN	TRACER	LDG. D'FTSMAN
F.C.L.	[illegible]	W.J.O.

CHECKER		CHIEF D'FTSMAN
J.W.E.		8-4-[illegible]

SUBMITTED

CAPT. ORD. DEPT. U.S.A.

APPROVED BY ORDER OF THE CHIEF OF ORDNANCE

LT. COL. ORD. DEPT. U.S.A.

ORDNANCE DEPT. USA